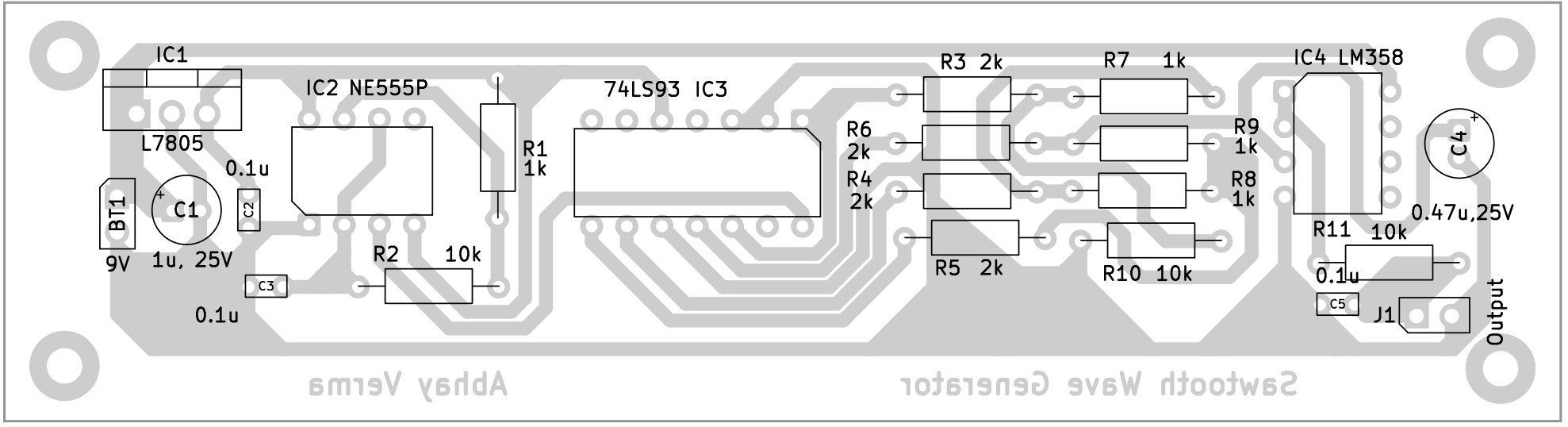

Fig. 7: Components layout